Datasheet - Metric

ITAS INTENSITYFLAME BURNERS

MODEL IF0060-GAS

Parameter	Value
Maximum Capacity input [kWlhv] *(Air pre-heating limits the maximum capacity)*	6000
Minimum Capacity input [kWlhv]	400
Fuels *(Contact Fives ITAS S.p.A. for dual gas or oil options)*	Natural gas, propane, butane, mixed gases *(Contact Fives ITAS S.p.A. for using special gases)*
Pressure drop gas gun [mbar] *(maximum capacity)*	Natural gas: 52,8 Propane: 21,3
Nominal combustion Air Inlet [Nm³/h]	7200
Air inlet pressure [mbar] *(At nominal input, 20°C)*	21,5
Lambda [-]	1,2 to 1,7
Combustion air temperature [°C]	Standard <20 On request <300
Fuel guns	Single - Gun for single gas Double - Gun for dual gas
Combustor options	Alloy (AISI 310) Refractory (83% alumina air bond)
Maximum chamber temperature [°C]	Alloy combustor: 600 (@ Lambda 1,4) Refractory combustor: 900
Flame dimensions [mm] *(Measured from outlet of combustor)*	Length 2700 Diameter 1000
Ignition	Raw gas pilot, natural gas or propane
Pilot	Capacity [kW]: 28 Gas pressure NG [mbar]: 30 Gas pressure Propane [mbar]: 12,5
Flame Monitoring	UV scanner or Infrared scanner
Emissions	On request
Mounting position	Horizontal Vertical up Vertical down (use a continuous fan operation)
Weight [kg]	Burner with alloy combustor: 260 Burner with refractory: 500

Notes:

- All data are based on net calorific values = lhv
- All information is based on common practice for gas and air pipe design.
  If support is needed please contact Fives ITAS S.p.A.
- All inputs are based on laboratory testing at neutral chamber conditions
- Natural gas: lhv = 9,97 kWh/Nm³; d=0,56
- Propane: lhv 26,3 kWh/Nm³; d=1,58

1. OPERATION CURVE (AMBIENT COMBUSTION AIR)

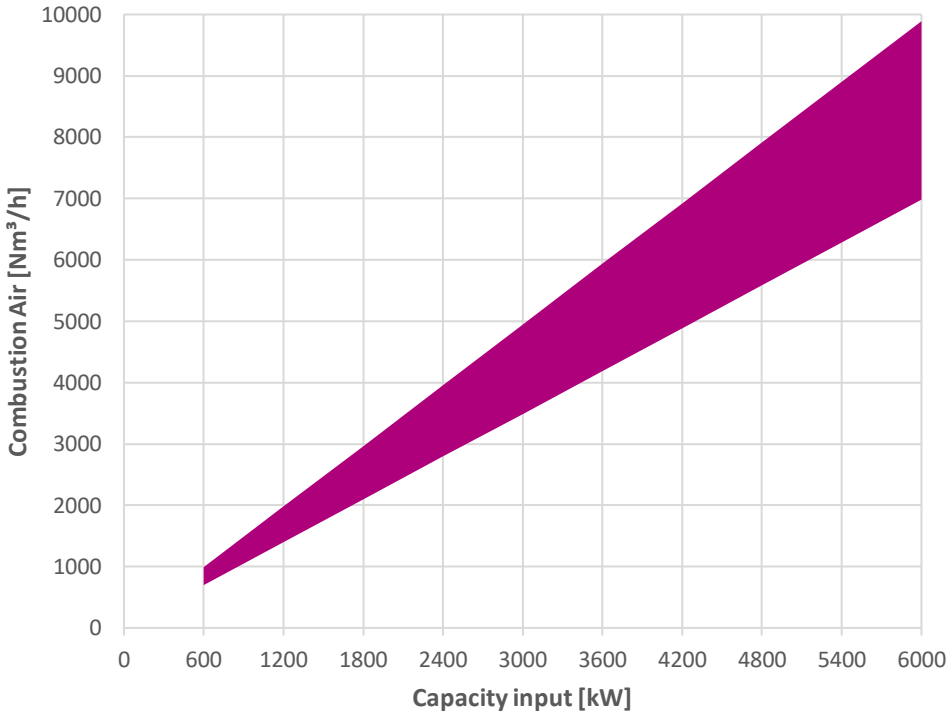

2. COMBUSTION AIR PRESSURE DROP

Pressure drop should be taken between the chamber and windbox pressure tap (tap B)

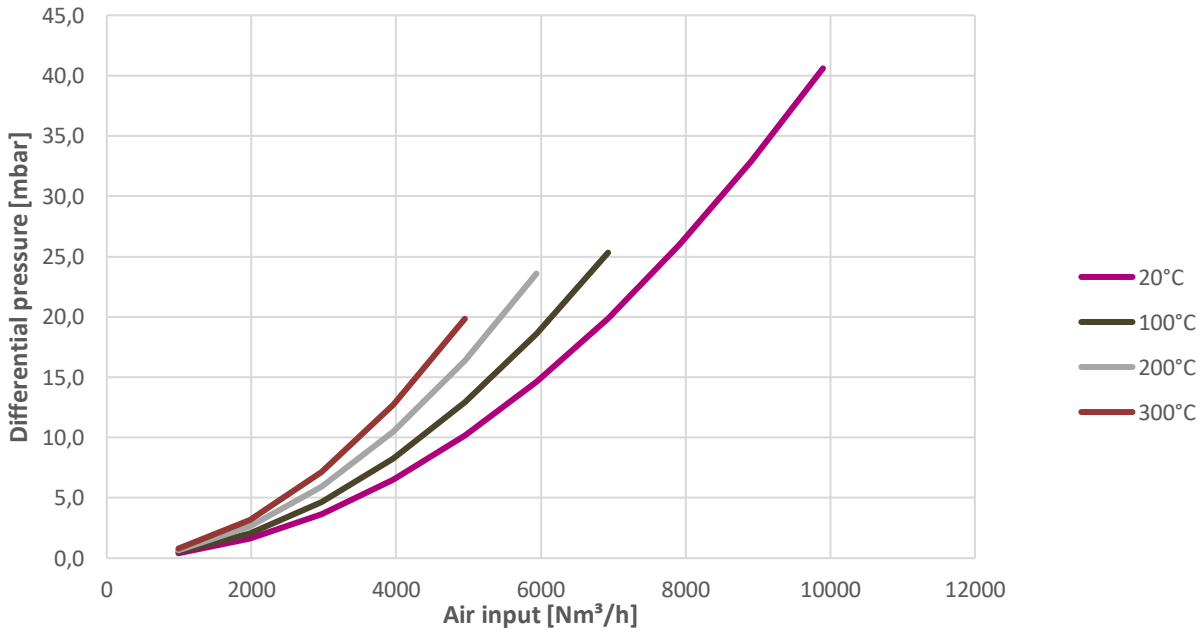

3. GAS GUN PRESSURE DROP

Pressure drop should be taken as differential between the chamber and gas gun pressure tap A.

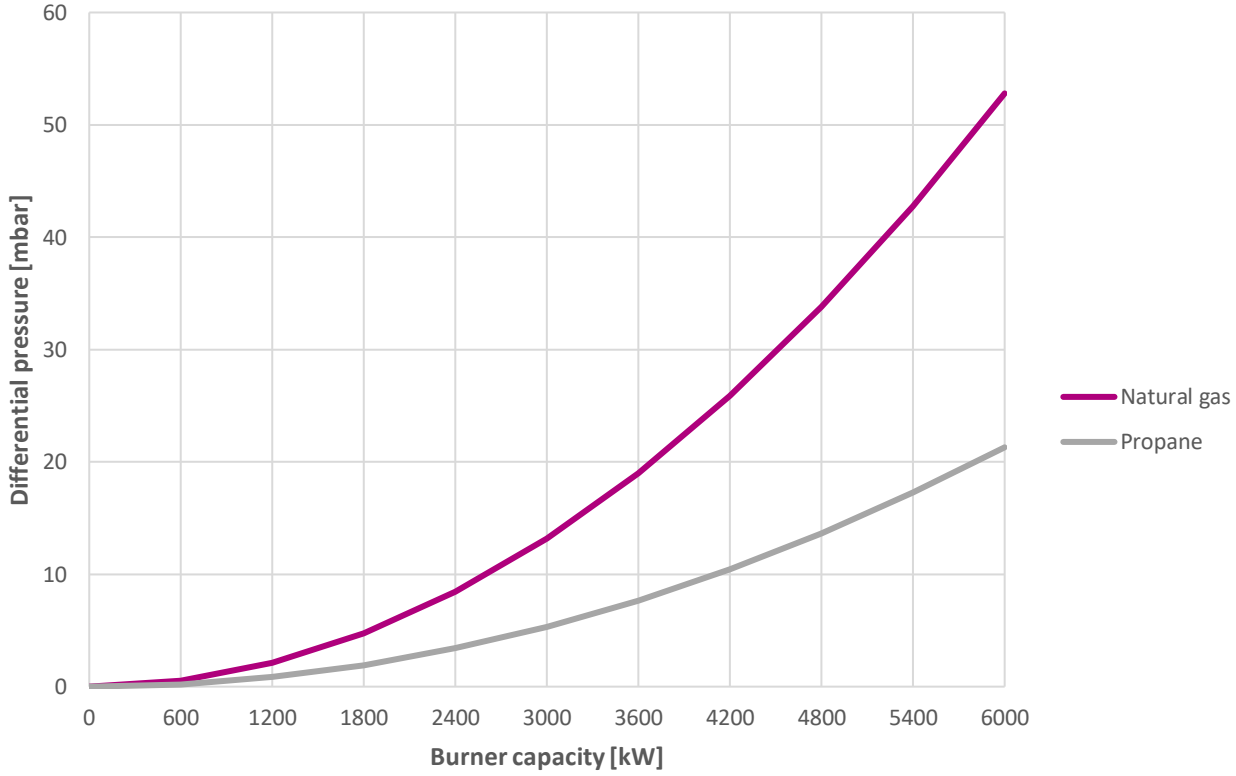

Note: Pressure drop curves should be used as a guide for setting up burner. It is recommended to use fuel flow measurements for determining actual fuel flows.

4. DIMENSIONS

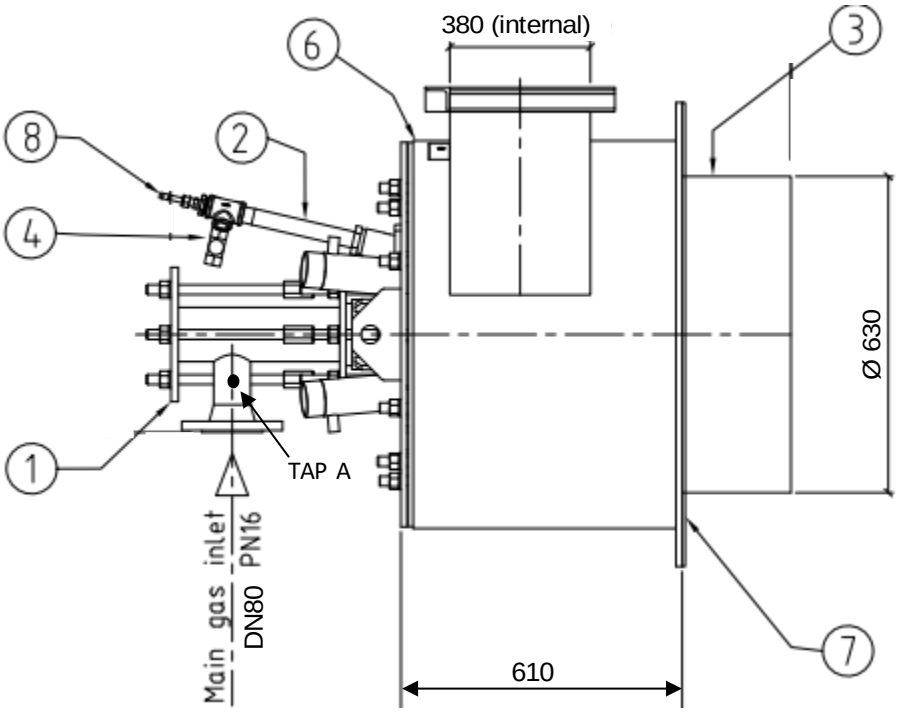

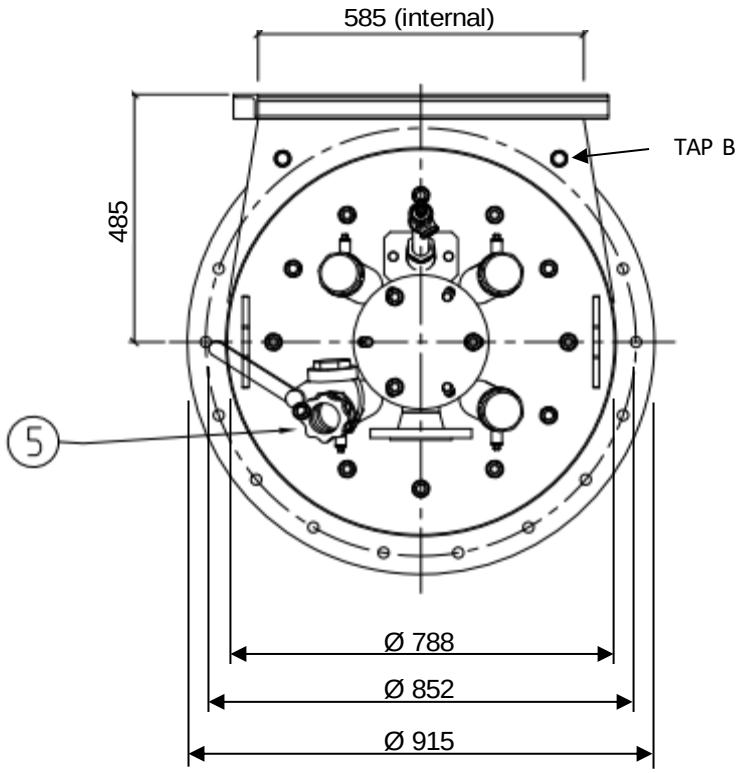

Pos	Description
1	Gas gun
2	Pilot burner
3	Combustor (refractory/alloy)
4	Pilot gas adjusting tee
5	Sight glass with valve
6	Burner body
7	Burner gasket
8	Ignition spark rod